# ASSEMBLY INSTRUCTIONS | **mPulse** Conquer

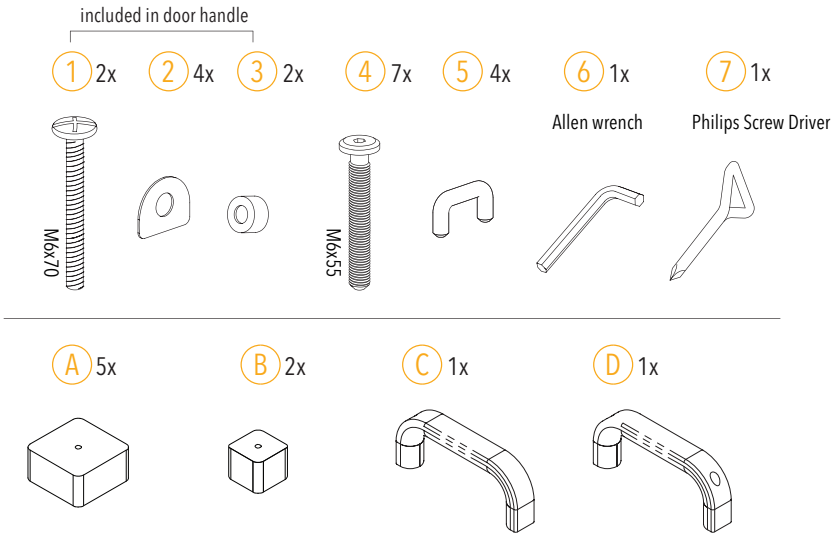


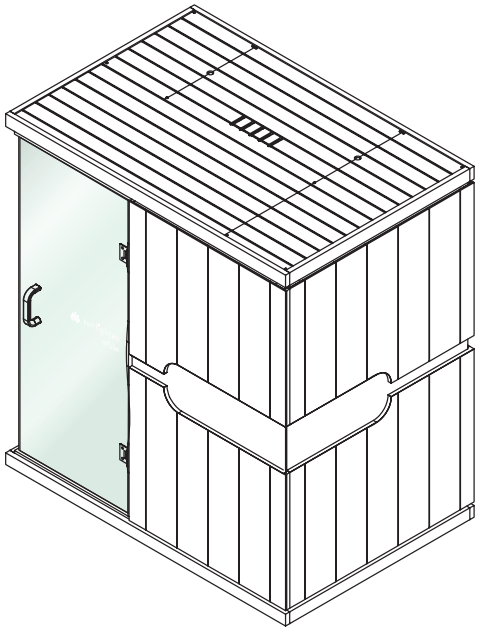

E 1x Roof

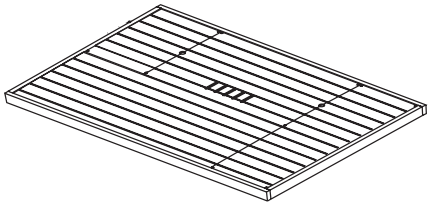

F 1x Floor

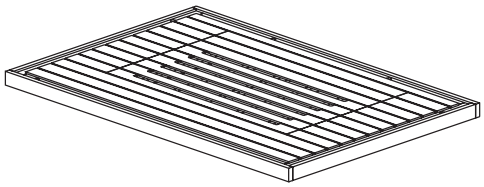

G 1x Back Wall

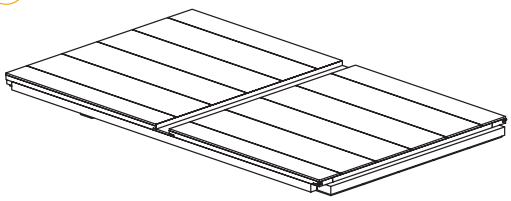

H 1x Right Wall

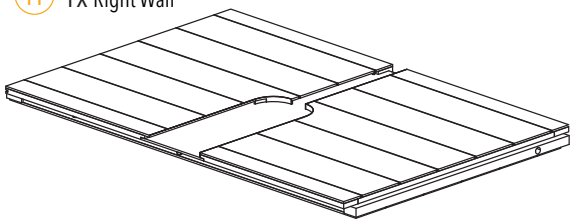

I 1x Left Wall with glass panel

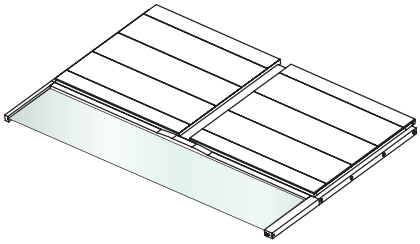

J 1x Front Wall

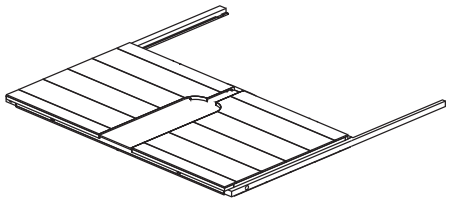

K 1x Bench

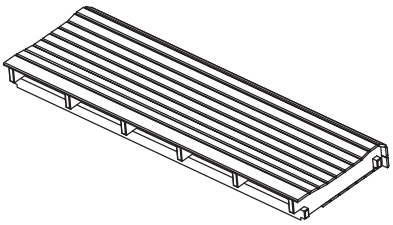

L 1x Glass Front Door

M 2x 11 in, 1x 3 1/2 ft.

sunlighten

## PRE-STEPS

Unpack each wall segment from the shipping material. Stage each wall segment in the room you will be assembling the unit.

Remove the internal wooden heater frames during unpacking of the wall segments, set these aside for installation after the sauna is assembled.

Remove the small wooden wire covers at the base of each vertical wall segment, set aside for placement after the sauna is assembled.

240V, 3600 watts. Dedicated 20A circuit* (not found in common electrical setups - may need a transformer to accommodate.) and 20A power socket with no GFCI or similar fault protection installed in the meter box.

See USER MANUAL

** Failure to do so will void your sauna's warranty and customer will assume liability for any electrical damages to the sauna itself or the residence/business in which the sauna is installed.*

## STEP 1

The first step to installing your new sauna will be to insert the legs underneath the floor panel. The holes are already pre-drilled so all you need are the bolts (4) and the Allen wrench (7). This is necessary to allow air circulation to flow underneath and maintain the integrity of the unit. After legs are in place, please turn floor panel 180° so the back of the sauna connects with the back wall (G) as shown below.

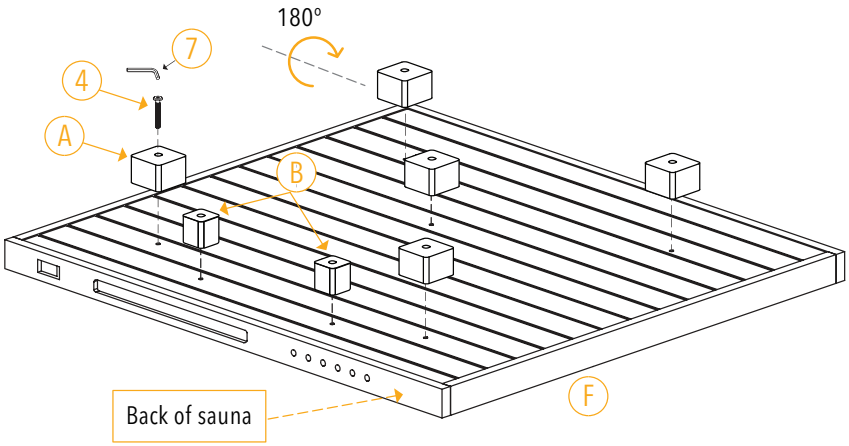


## STEP 2

Before you begin installing the walls, be sure you have at least:

- 6.2 in between the back of the sauna and the outlet wall.
- 12 in gap from the top of the sauna to the ceiling.
- Place the sauna next to the wall power outlet to ensure you have access to the wall power socket outlet to cut the power to the unit if required.

Make sure the floor panel is placed on a surface that is relatively smooth and perfectly level. Failure to do so can cause the door to not close all the way in the later steps.

In this step make sure one person is holding the wall while the other helps balance it and press it in place.

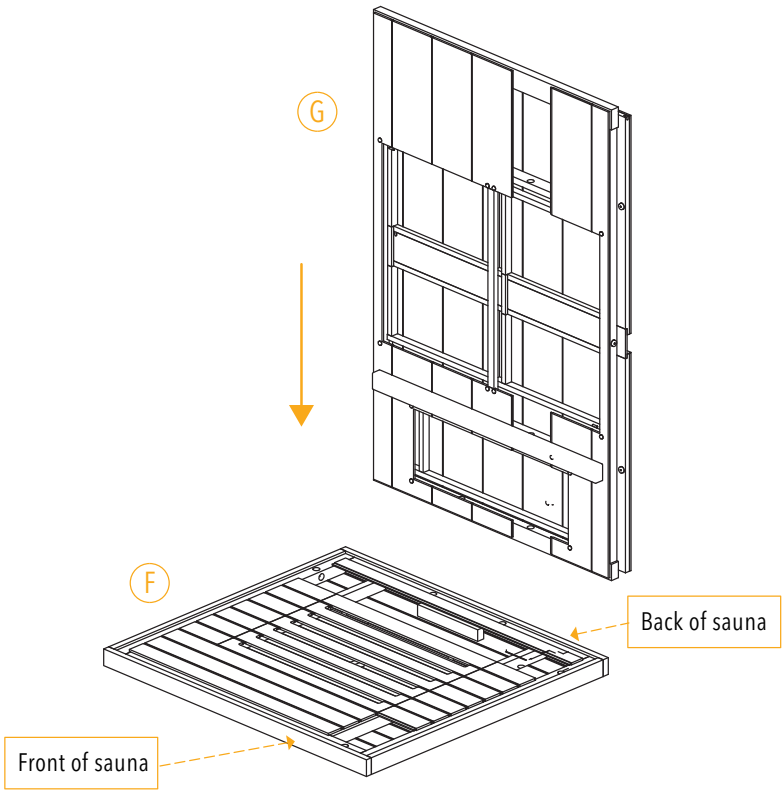




sunlighten

## STEP 3

The following walls will be inserted the same way as STEP 2. Make sure the wires coming out from the bottom hatches don't pinch when you mount the walls.

## STEP 4

After you place each wall segement, please use the U-clips (5) and insert them in each upper corner to hold the walls together.

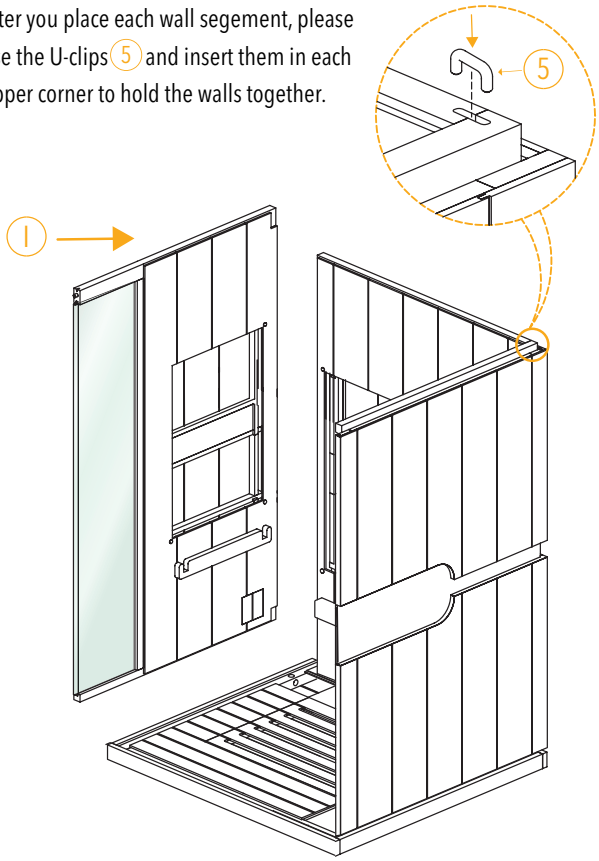


## STEP 5

The front wall (J) will be the last to install.

There will be wire connections that need to be made at the base of each wall panel. These can be accessed by small hatches on the walls (floor hatch for the front). If a cable gets stuck in the floor it can be accessed by removing the wood piece that covers the power box.

A diagram showing the connection locations can be found on STEP 8.

NOTE: If you ever have trouble getting a U-clip to slide in, this can be resolved by tapping it with a hammer.

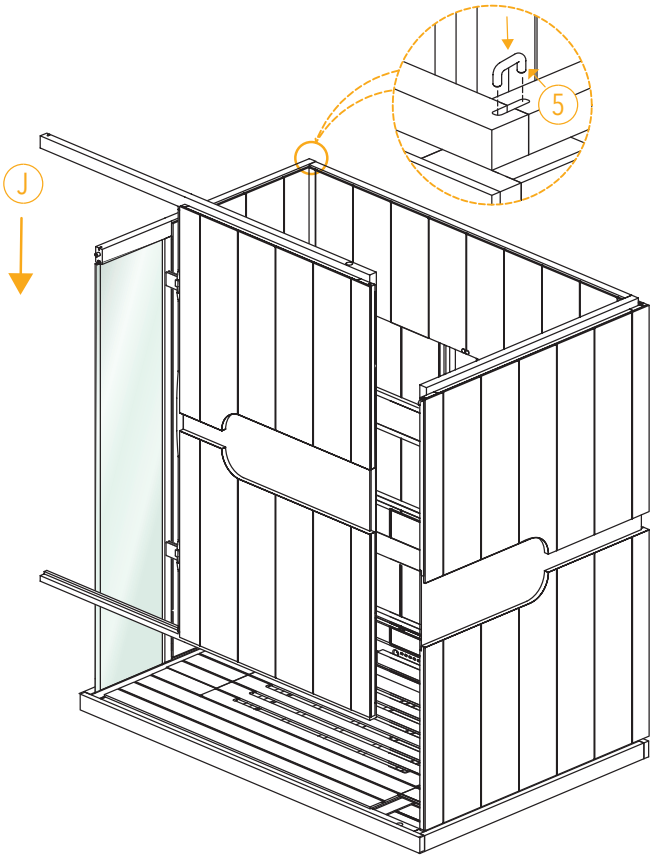




sunlighten

## STEP 6

After all four U-clips (5) are inserted in the corners, the next step will be to place the roof on top. The roof will also reinforce the walls in position along with the clips.

NOTE: The roof may require some slight manipulation to fall into place on top of the wall panels.

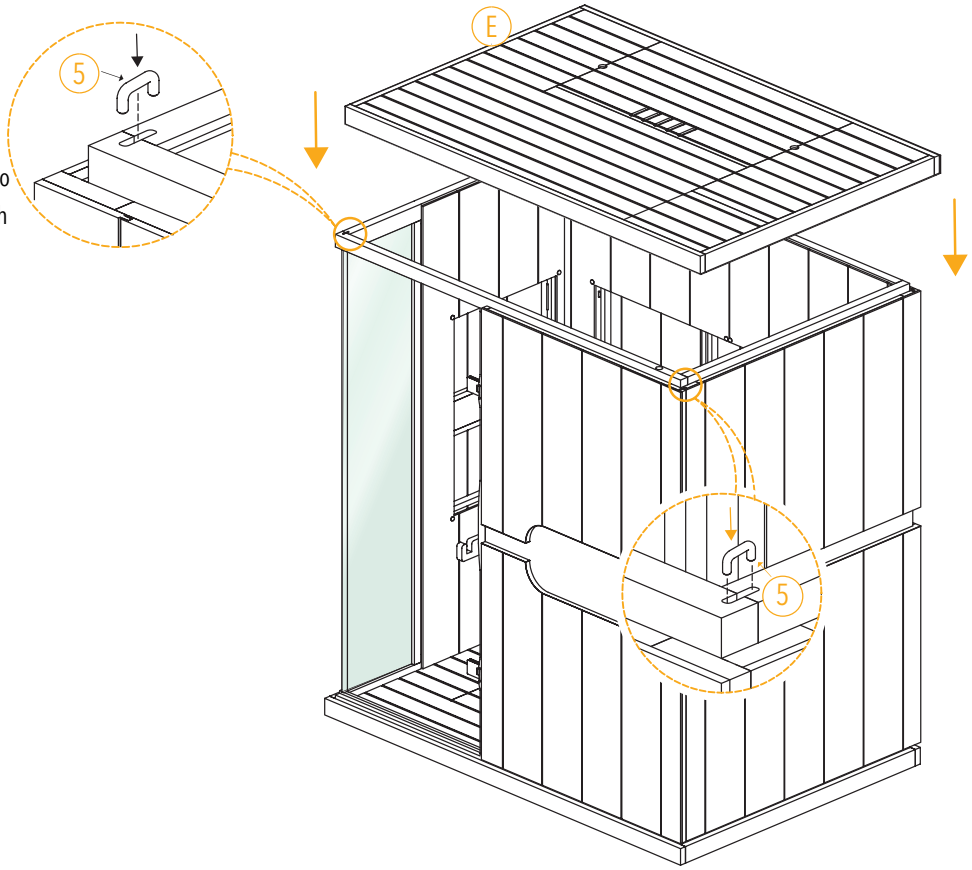


## STEP 7

After the roof is placed, remove the dust covers. There should be the connections to the lights and speakers at the top front. Connect those so you can turn on the lights and listen to sound. In addition there will be one metal-loop lead. Those can be screwed into the radio antenna.

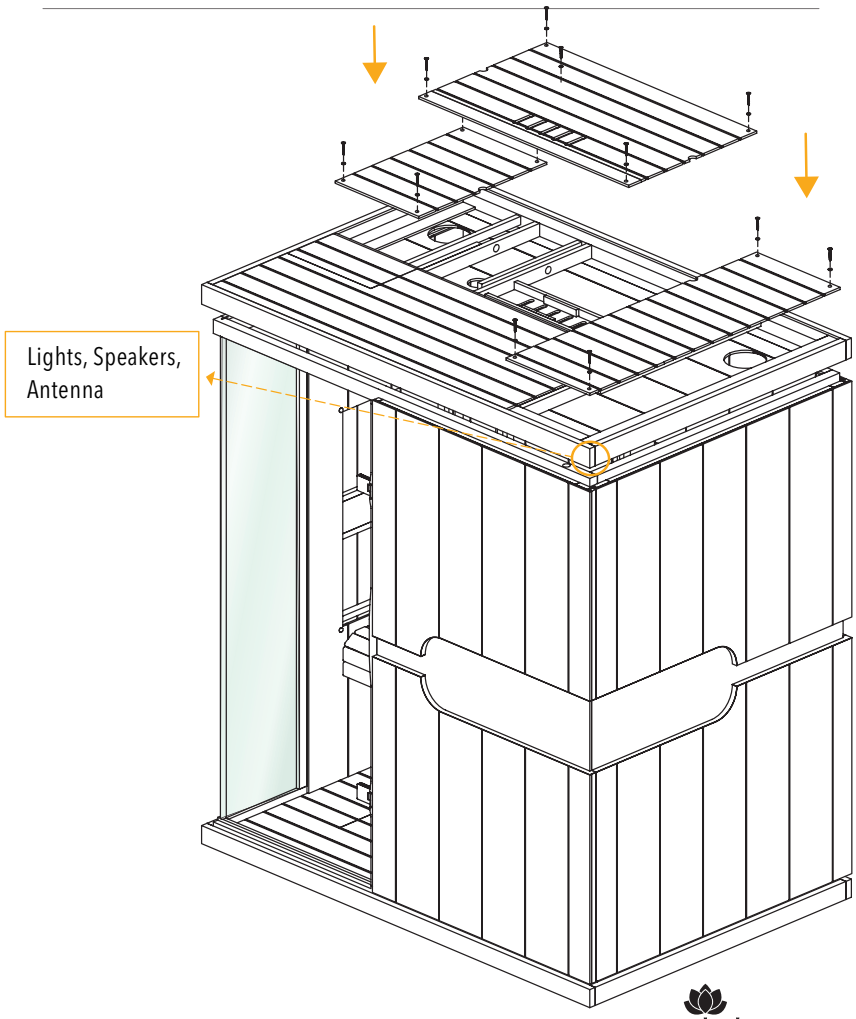




sunlighten

## STEP 8

The dust cover should be replaced to protect the lights and speakers from dust and other floating residue. Place the heater frames in their respective locations if you have not yet done so. As mentioned in STEP 5, there are four connections to be made in each bottom section of the walls. If you have not yet done so, consult with the diagram at the bottom of this page.

NOTE: Look at the back of the heater frames for the "This Side Up" sticker for proper orientation.

After all four floor connections have been made, please install the bench (K). Make sure the heater frames are not mounted otherwise they will prevent the bench from resting on the supports.

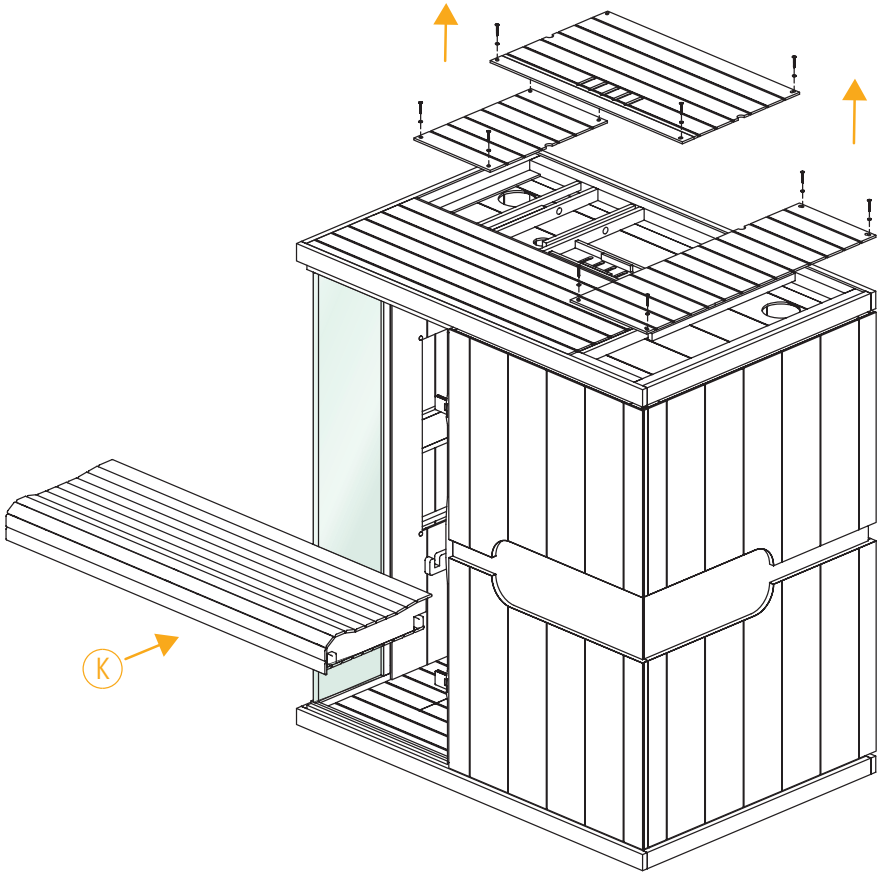


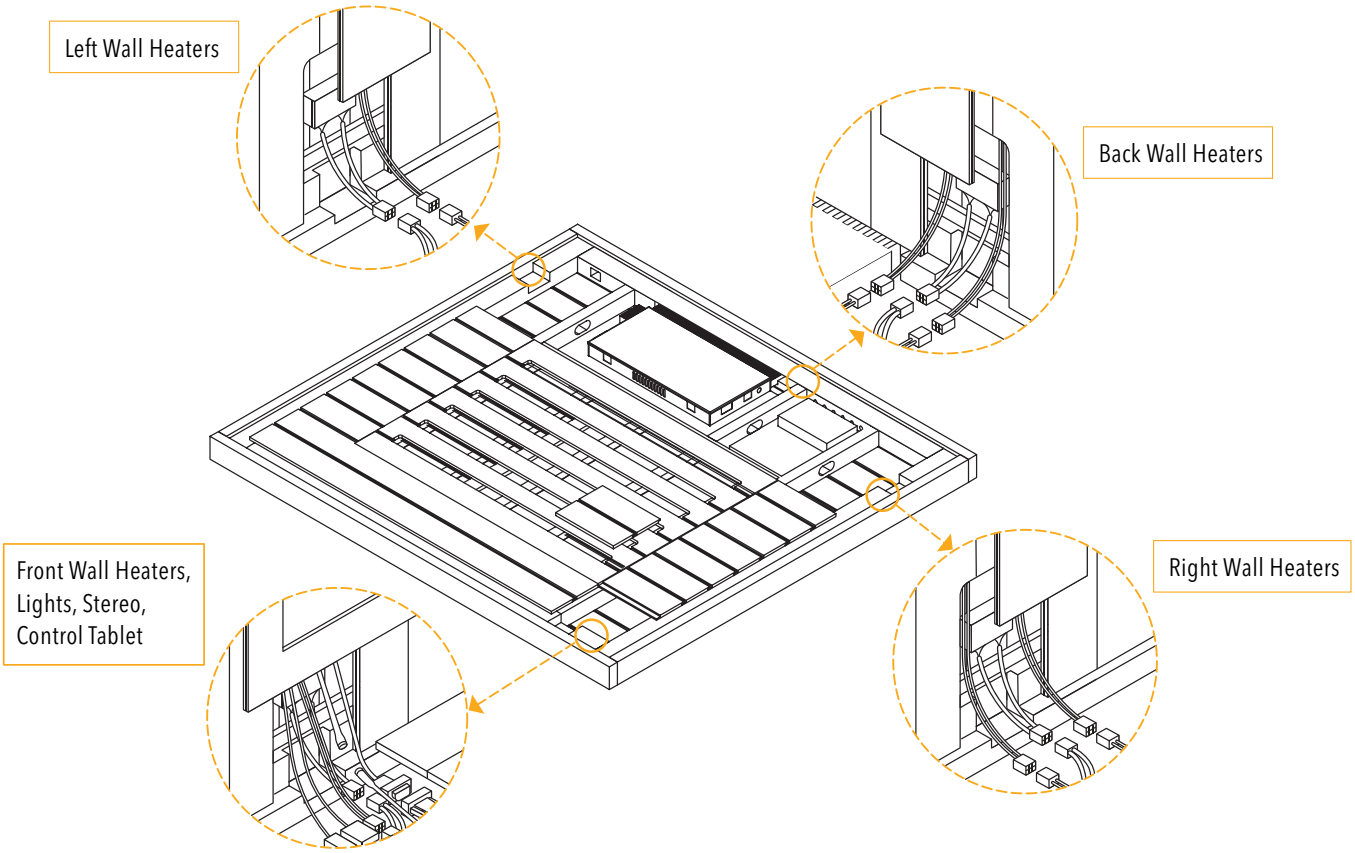

## STEP 9

After the bench is placed in the unit, the next step will be inserting the glass door (L). Please ensure you have at least one other person to assist with this step. Do not put the door handles on as that will be done in a later step after the door has been safely attached in this step.

NOTE: You can use a paint stick to shim the glass door at a desirable angle above the threshold as you mount it.

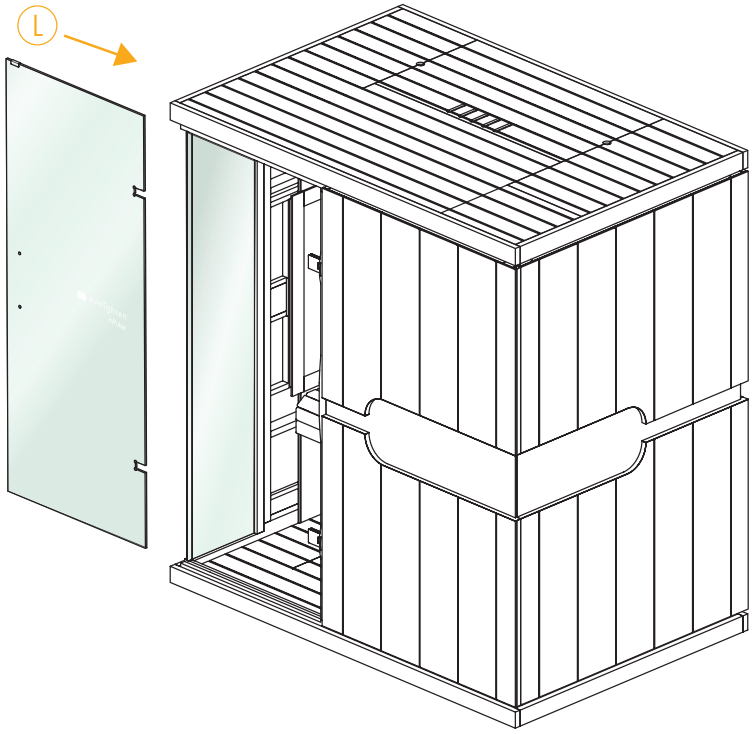


## STEP 10

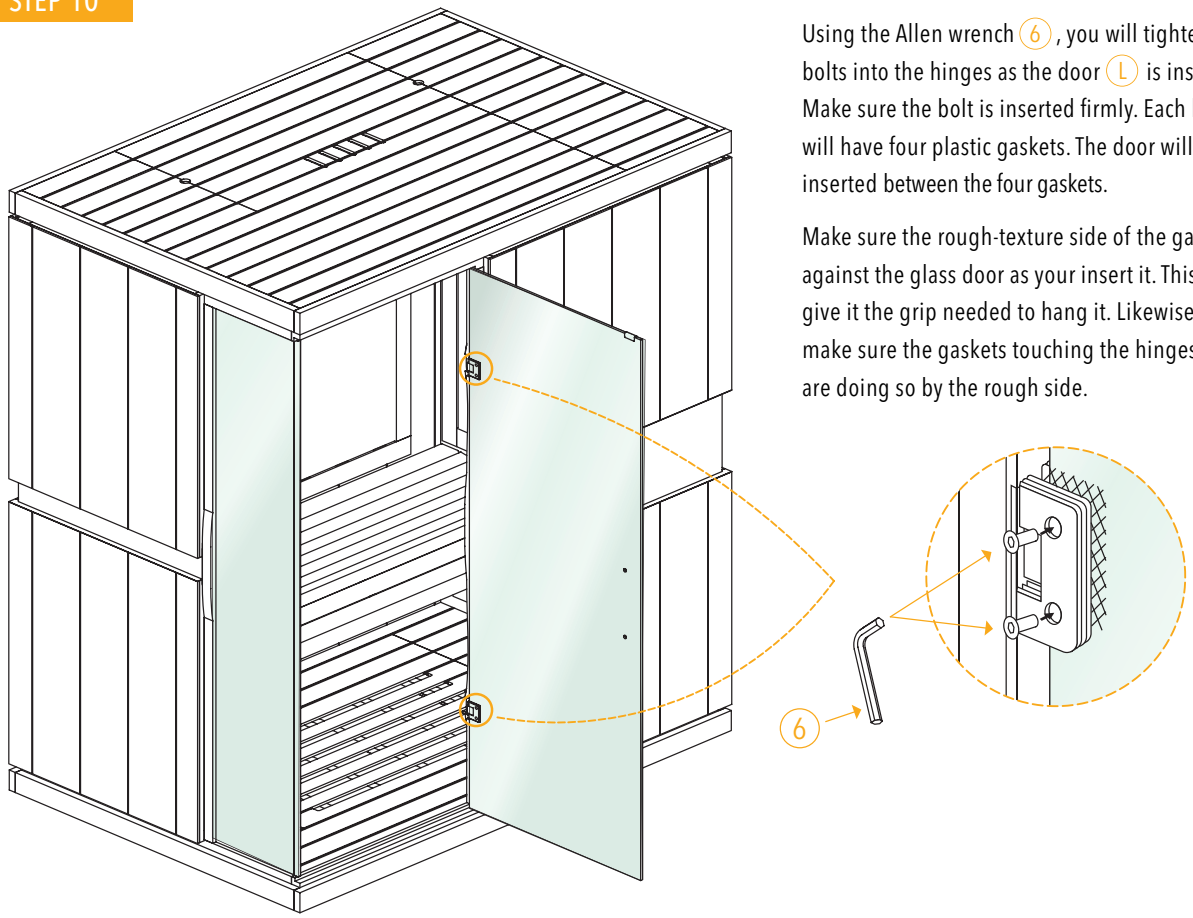


Using the Allen wrench (6), you will tighten the bolts into the hinges as the door (L) is inserted. Make sure the bolt is inserted firmly. Each hinge will have four plastic gaskets. The door will be inserted between the four gaskets.

Make sure the rough-texture side of the gasket is against the glass door as your insert it. This will give it the grip needed to hang it. Likewise, make sure the gaskets touching the hinges also are doing so by the rough side.



sunlighten

## STEP 11

The gaskets, bolts and washers (1), (2) and (3) will come with the handles. The washers need to be inserted into the door holes first before the gaskets go on and eventually the bolts. The rough side of the gaskets must be facing the glass door. Be sure to have a second person hold the handle in place while the other inserts the bolt.

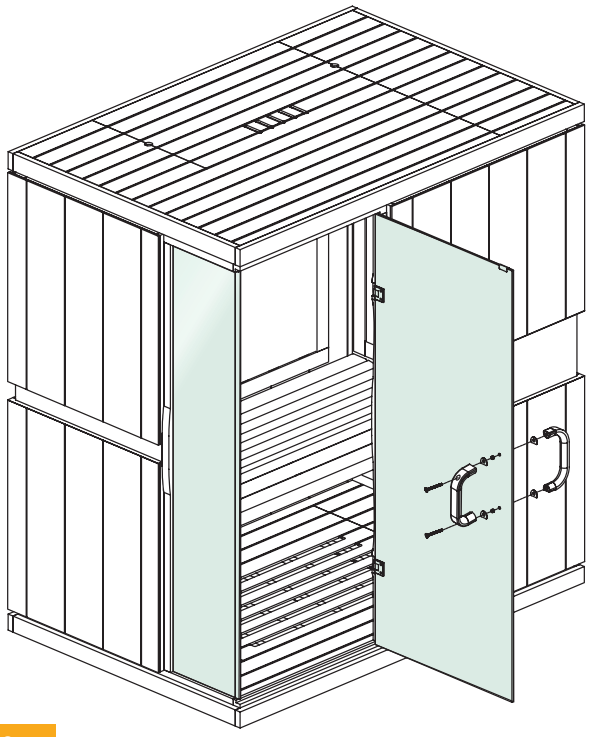

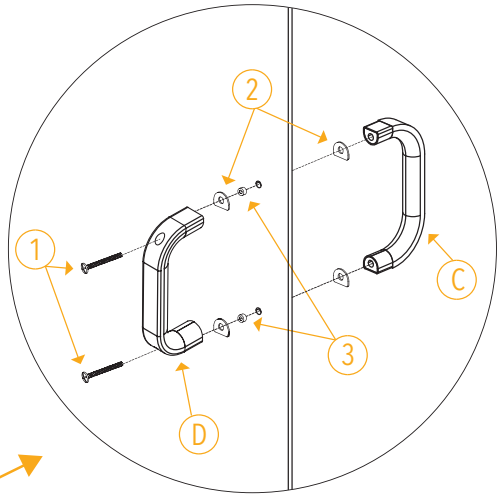


## STEP 12

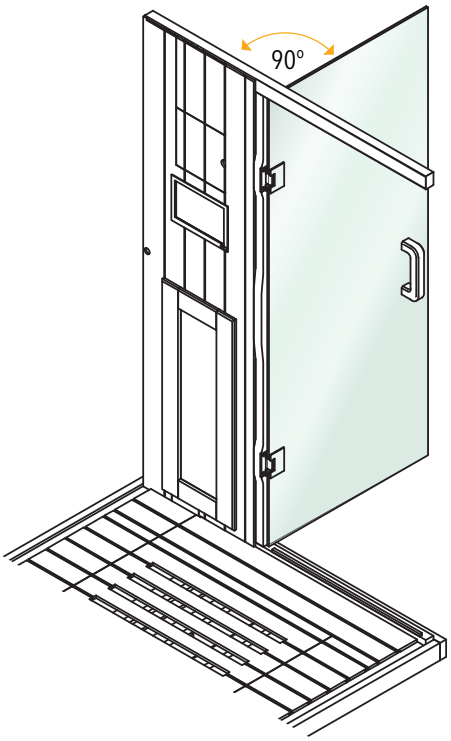


Installation Guidance for the INTERIOR DOOR SEAL

After the glass door installation is completed, ensure the gap between the glass door and wooden frame is at least 1/8 in.

Open the glass door to 90°.
Carefully remove the blue protection film.

Make sure to clean the inside edge of the glass with a wet towel, then dry before applying the strips.



sunlighten

## STEP 12

Remove the backing layer of the 3M adhesive tape on the strip.

Adhere the shorter strip (m1) on the top and bottom section to inside edge of glass door.

Adhere the longer strip (m2) on the middle section to inside edge of the glass door.

Close the door slowly and check to make sure the strips don't hit the wooden frame which could cause the strips to peel off.

In case the strip hits the wooden frame, adjust the door hinge to increase the gap between the door and the wooden frame.

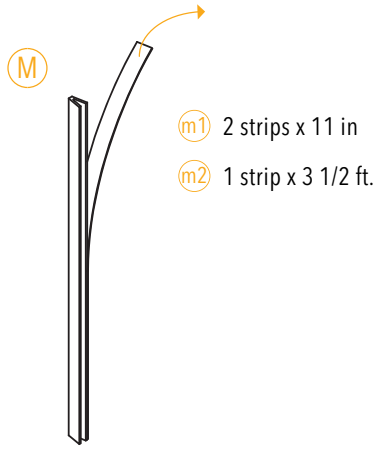


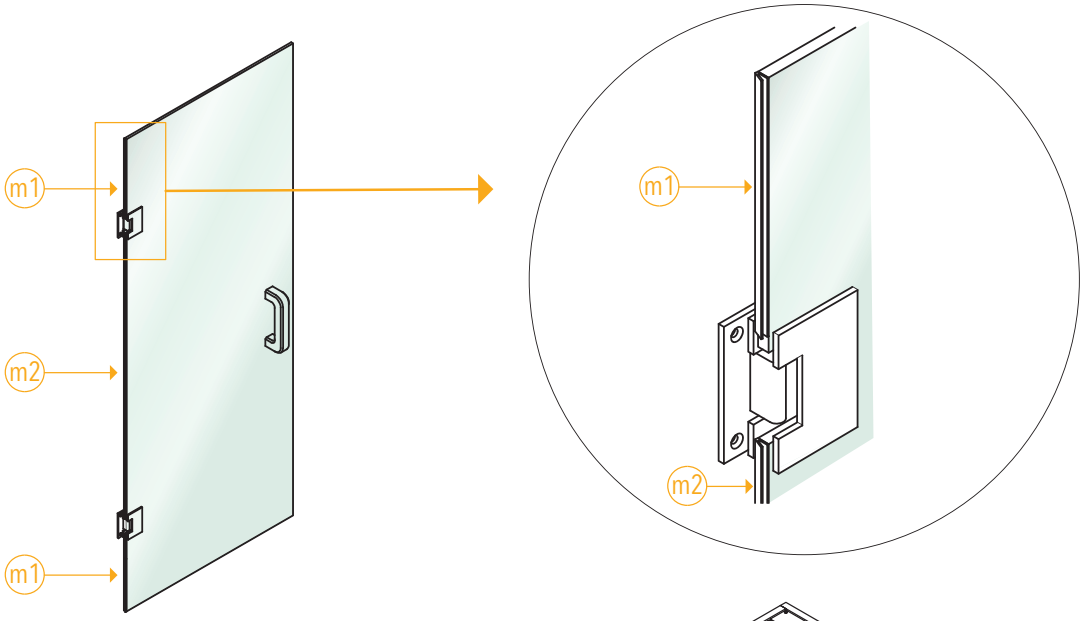


CONGRATULATIONS, your sauna is now ready to enjoy!

If you have any questions, please call
**Sunlighten Customer Support** at 1-877-292-0020 x4

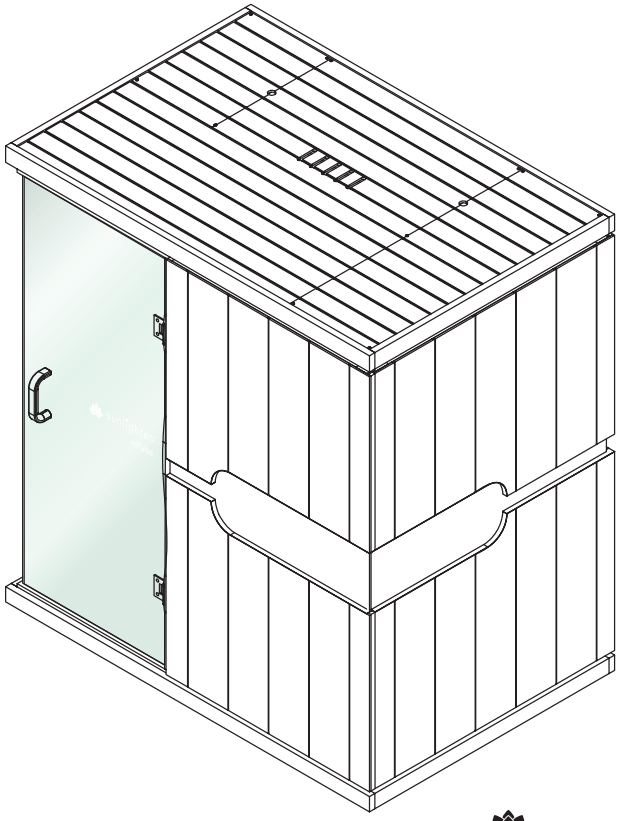

4062022



sunlighten